MyAVR

MyAVR Board MK2 Version 2.10

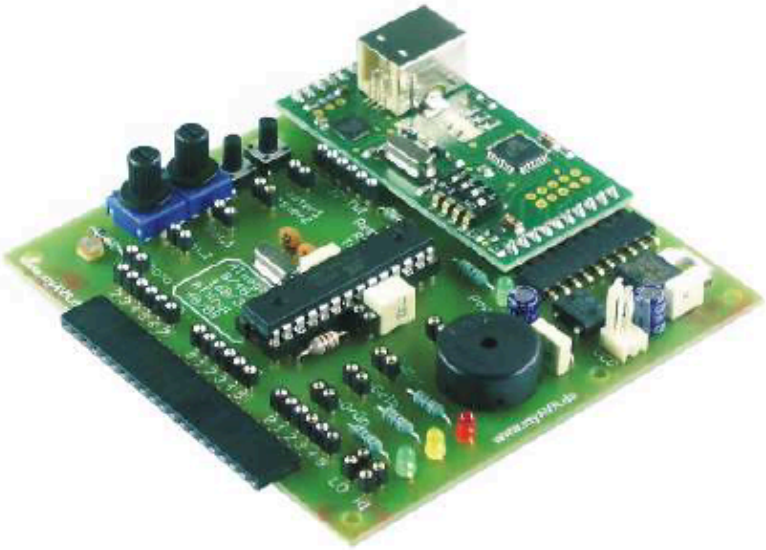

General information

layout

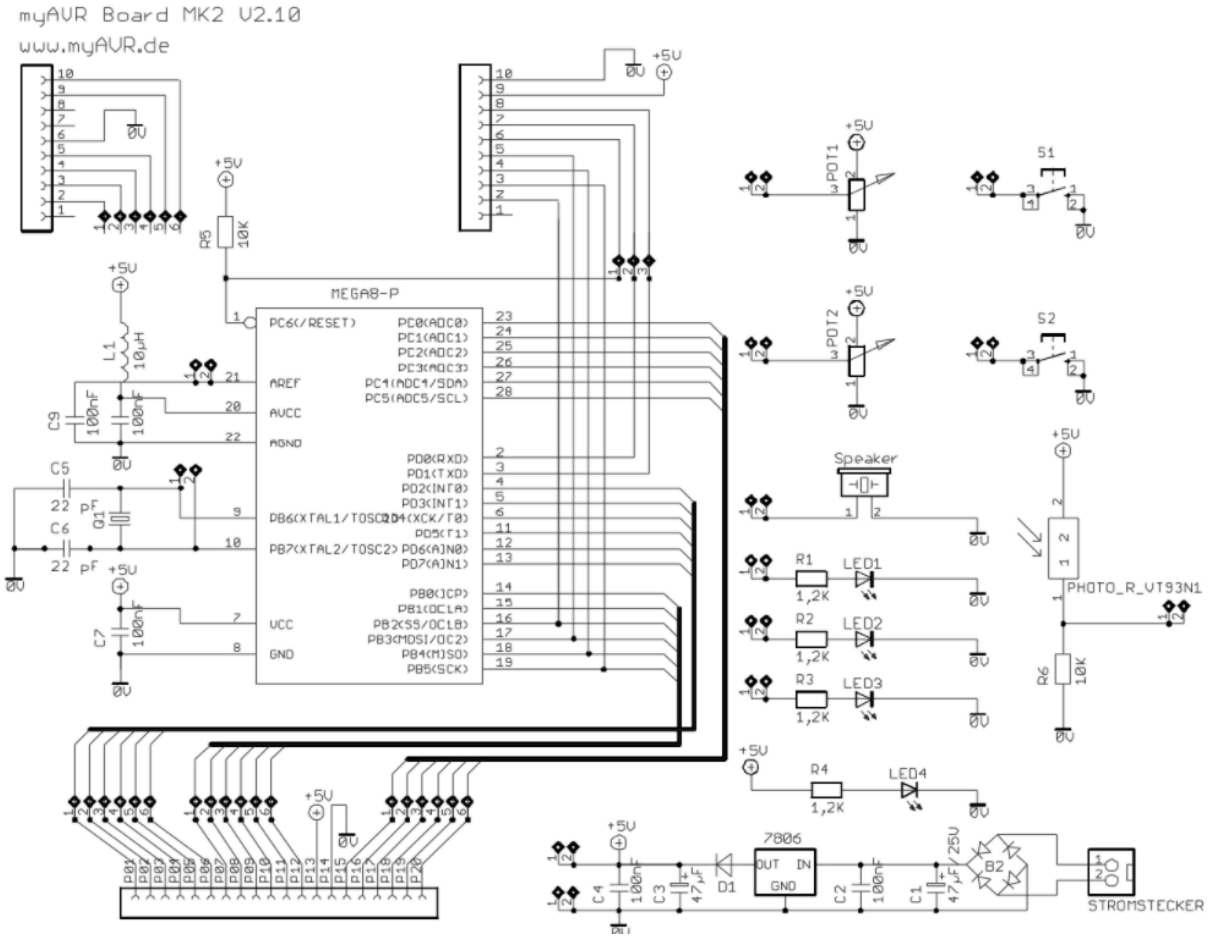

pins

Arduino	0	1	2	3	4	5	6	7	8	9	10	11	12	13	A0	A1	A2	A3	A4	A5
AVR	PD0	PD1	PD2	PD3	PD4	PD5	PD6	PD7	PB0	PB1	PB2	PB3	PB4	PB5	PC0	PC1	PC2	PC3	PC4	PC5
Function	RXD	TXD		PWM		PWM	PWM			PWM	PWM	PWM	MISO	SCK					SDA	SCL

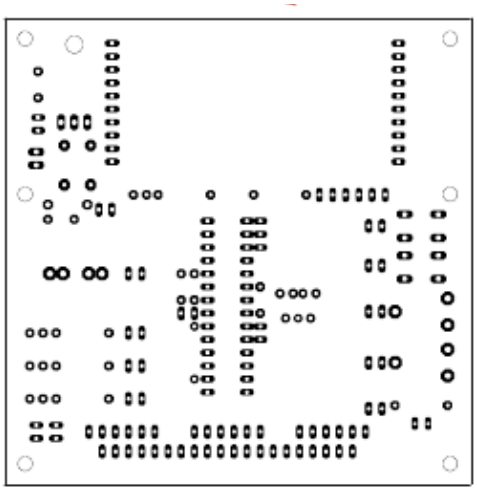

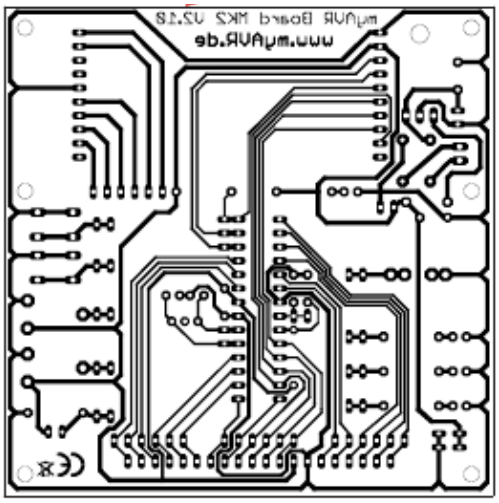

list of material

component	type	qty
processor	ATmega8	1
voltage regulator	7806	1
rectifier	B80C800DIP	1
diode 1A	1N 4001	1
LED yellow 2 mA	LED 3MM 2MA GE	1
LED green 2 mA	LED 3MM 2MA GN	2
LED red 2 mA	LED 3MM 2MA RT	1
capacitor 100 nF	FOLIE MKS-2 100N	5
capacitor 47 µF	ELKO RAD 47/25 V	2
capacitor 22 pF	KERKO 22P	2
inductor 10 µH	SMCC 0,10 µ	1
resistor 1.2 kOhm	METALL 1,20 K	4
resistor 10 kOhm	METALL 10 K	2
photoconductive cell	VT93N1	1
quartz 3,686411-HC49U-S		1
potentiometer	RT 10-L 47 K	2
rod for potentiometer		2
miniature switch	TASTER 3301B	2

IC-socket	GS28	1
pin header male	SPL20	3
piezo electric buzzer	EPM121	1
connector	PSS 254/2G	1
Clutch empty case		1
crimp pin		2
pin header female	BL 1X20W 2,54	1
pin header female	BL 1X10W 2,54	1
printed circuit board	myAVR Board MK2, Version 2.10	1
multi-pin connector	1x10; 2,54	2
Füße für Board		4
USB programmer	mySmartUSB MK2	1

Skirting boards to slit slightly from the two sides to guarantee a clean separation. Reserve is perhaps supernumerary

Assembly instruction

Procedure It is advisable to start to equip the board with the elements with lowest height. Then you proceed further in order of the components height (e.g. resistors, small capacitors, IC-sockets, Potentiometer, sounder, ...).

In the first instance it is advisable to put the equipped board in operation without the microcontroller and to check for the voltage of 5 V on the contact points according to the circuit diagram.

After the board is equipped with the integrated circuits a full performance check can be realised. If you do not have a suitable test-program, the program "myAVRQuickProg" is available for download on www.myAVR.com. With this program you can burn a test-routine on the myAVR Board, which allows it to check the microcontroller and the in- and output devices.
At work with integrated circuits avoid static (e.g. caused by friction on clothes)!
Circuit diagram

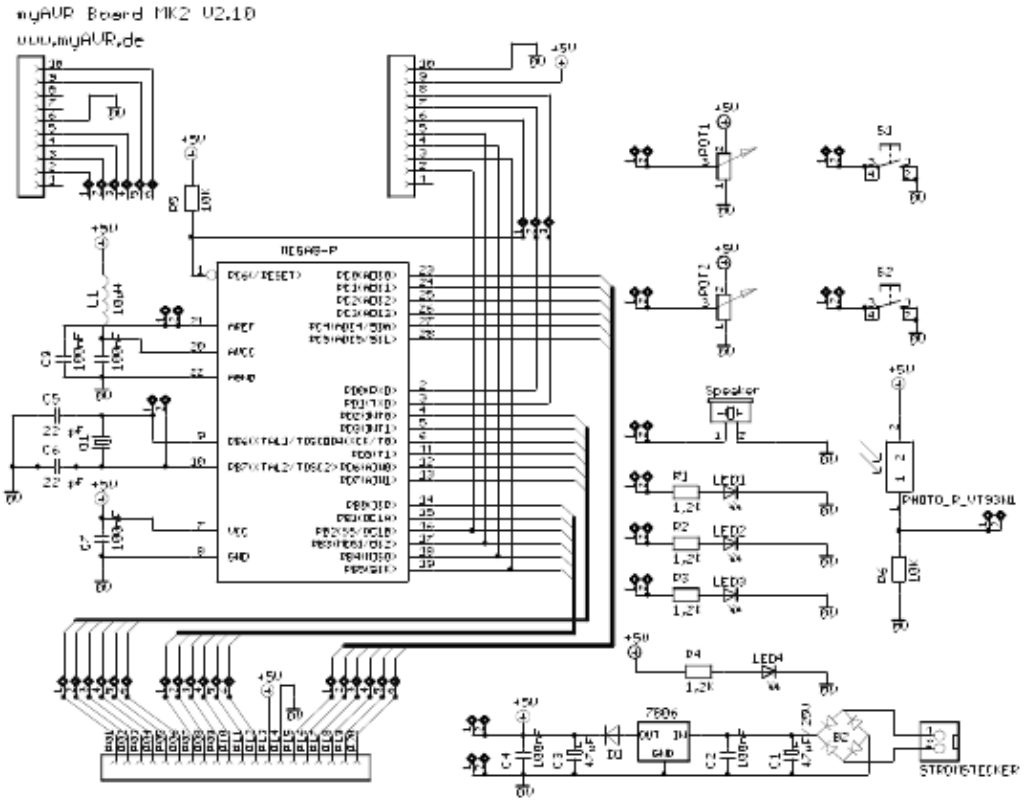

Assembly diagram

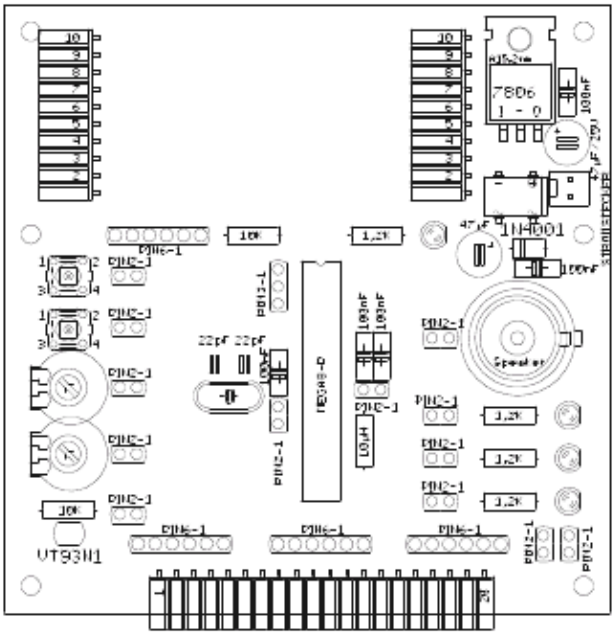

Important: You can plug in the components easily, without effort.
Pay attention to the polarity.

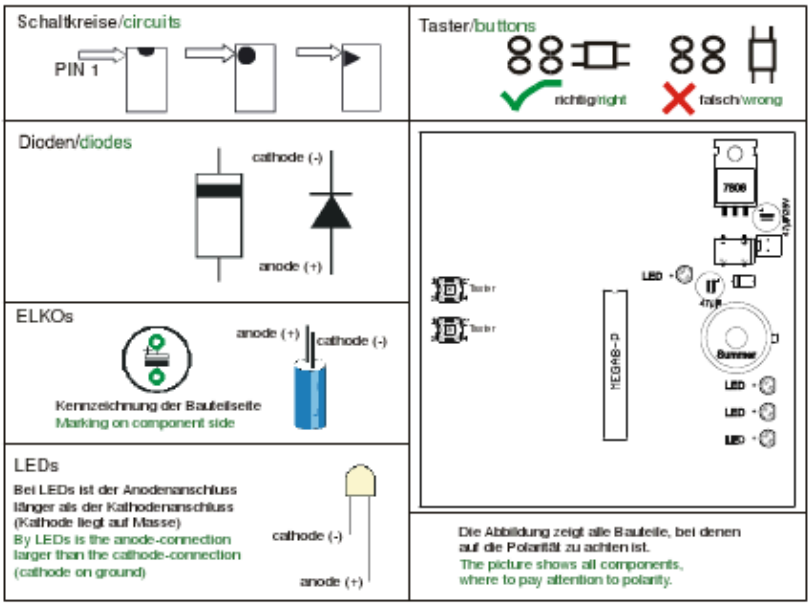

MyAvr board with arduino

add the following to the boards.txt

```
myavrboardmk2.name=myAVR Board MK2
myavrboardmk2.upload.protocol=avr910
myavrboardmk2.upload.maximum_size=7168
myavrboardmk2.upload.speed=19200
myavrboardmk2.upload.tool=avrdude
myavrboardmk2.bootloader.low_fuses=0xdf
myavrboardmk2.bootloader.high_fuses=0xca
myavrboardmk2.bootloader.path=atmega8
#myavrboardmk2.bootloader.file=ATmegaBOOT.hex
myavrboardmk2.bootloader.unlock_bits=0x3F
myavrboardmk2.bootloader.lock_bits=0x0F
myavrboardmk2.bootloader.tool=avrdude
myavrboardmk2.build.mcu=atmega8
myavrboardmk2.build.f_cpu=3686411L
myavrboardmk2.build.core=arduino
myavrboardmk2.build.variant=standard
myavrboardmk2.build.board=AVR_ATMEGA8
```

USB programmer and interface

mySmartUSB MK2 is a compact USB programmer and communication interface for Atmel AVR-microcontrollers.

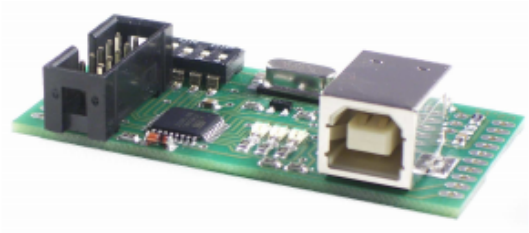

With this board you can program a huge number of AVR systems or communicate with them via an UART-USB-bridge.

The USB programmer mySmartUSB provides specific options to connect it to our myAVR MK2 USB boards or to Standard-ISP. For communication with the PC it uses a virtual COM-Port. This means, that you can simply plug in this board to the USB-interface of your PC, and it will be supplied with power and be ready to communicate. A Parallel- or COM-Port is not necessary.

mySmartUSB MK2 can be used in two different ways. Either you are using it as an individual and AVR910/AVR911 compatible programmer. Additionally mySmartUSB MK2 can be used as a basis for other practical applications such as an UART-USB, SPI-USB or TWI-USB converter. The firmware has an special automatic step down mode for controllers, which were switched to clock rates under 1 MHz. That makes it possible to respond with other speeds as the standard ISP-rate. The block mode of the AVR911 protocol allows a very fast data transmission and programming rate. For new controller types and protocols the firmware can be updated over a preinstalled bootloader.

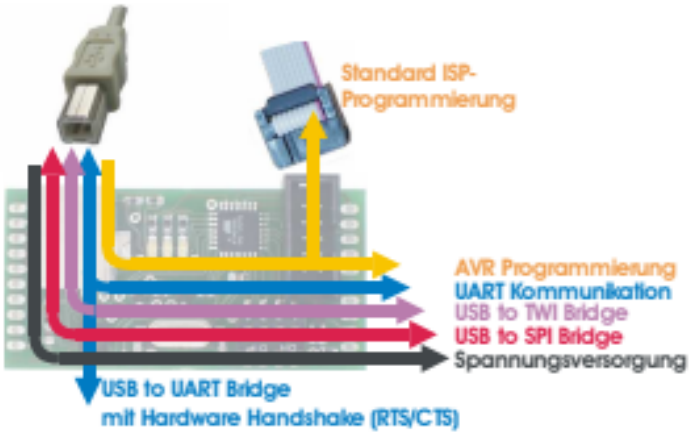

Properties

- Simple communication between microcontroller and PC resp. Notebook via the USB-interface
- The ISP-Adapter allows it to program various AVR systems.

- Standard Atmel 10 PIN assignment
- Interface for the myAVR Board MK2 USB
- Industrial standard controller (CP2102) USB to serial converter
- ATmega8 with firmware that supports ATMEL AN910 and AN911 programming standard
- Fast programming via USB 2.0 per block mode (AVR911)
- Switchable between programming, communication, and neutral mode
- Power On and Power Off switchable by user
- Provides virtual COM-Port
- Status indication (red/green LEDs)
- Power supply over USB interface
- Simple handling
- Firmware-Updates over a boot loader
- DIP-switch for operating mode, power, programming and data mode, RESET and boot loader

Technical data	
Operating data	
Supply voltage	5V via USB bus
Operating current	10-50 mA typical without other loads up to 100 mA if connected to target system
Operating voltage	5V
Operating temperature	0 °C to +30 °C
Maximum values	
Maximum current	5V via USB bus
Maximum voltage	100 mA via USB bus
Storage temperature	-20 °C to +70 °C

Mechanical data	
Dimensions (LxWxH)	ca. 60 mm x 30 mm x 12 mm
Weight	ca. 12 g
Grid dimensions	2.54 mm
Printed Circuit Board Material	FR8, thickness 1.5 mm, Cu layer 0.35 µm,

	two-sided, soldering resist mask, tin-plated, plate through
Dimensions (LxWxH)	ca. 60 mm x 30 mm x 12 mm

Standard-ISP 10 pin, print plug	
Pin	**ISP**
1	MOSI
2	VCC
3	GND
4	GND
5	Reset
6	GND
7	SCK
8	GND
9	MISO
10	GND

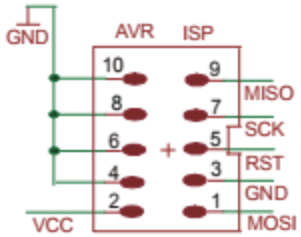

mySmartUSB MK2 interface	
PIN	
1	do not use
2	SPI-SS

3	SPI-SCK
4	SPI-MISO
5	SPI-MOSI
6	reset board
7	TxD PC (USB-UART-Bridge)
8	RxD PC (USB-UART-Bridge)
9	VCC for board (switchable, be aware of max. load of USB port)
10	ground
11-18	do not use
19	I2C/TWI-Clock=SCL
20	I2C/TWI-Clock=SDA

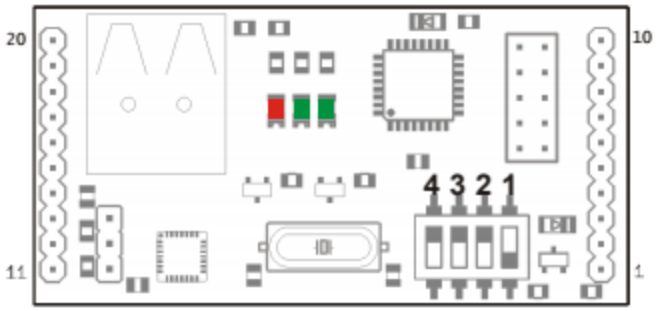

DIP-Switches and Operating Modes

Dip switch status					LED status			
	4	3	2	1	**OFF**			
Off					- All dip switches off			
On					- Target system is not powered over USB			
	4	3	2	1	**Standard**			
Off					Dip 1 ON			- Programming mode (AVR910)
On					- Soft mode (adjustable per software)			
								- Data mode (UART-USB-Bridge)
					- Target system supplied with power over USB			
								- myMode for TWI- and SPI-communication (active via software)
								- quiet
	4	3	2	1	**Data mode**			
Off					- Dip 1,2 ON			Data mode (UART-USB-Bridge)
On					- Forced to the data mode (UART-USB-Bridge)			
	4	3	2	1	**Firmware update**			
Off					- Dip 2,3 ON			
On					- Dip 4 switched ON/OFF = Reset			
	4	3	2	1	**Hardware reset**			
Off					-Dip 4 switched ON/OFF = Reset			
On								

USB driver installation

The USB programmer mySmartUSB MK2 uses a CP2102 USB-controller form Silicon Labs (www.silabs.com). This controller is a USB UART bridge and provides a virtual COM-port for your System, that can be used like any other normal COM-port.

Please note:
mySmartUSB MK2 must not be connected to your computer while installing the driver.

For installation you need administration rights.

Download the driver

You can download the driver from our website (www.myavr.com). Go into the download area and search for „driver“ or „DL46“. Safe the corresponding file on your computer.

Alternatively you can download the latest version of the driver also for other operation systems directly at www.silabs.com.

Uninstall the old driver

If you have installed an older version of the driver, you should remove it from your system before installing the new one. In case you are using Microsoft Windows please use the Control Panel to uninstall the driver.
The old driver could stand under this entry in the list

The driver should have the name "CP210x USB to UART Bridge Controller" or something alike. After the old driver has been removed, you can proceed to install the new driver.

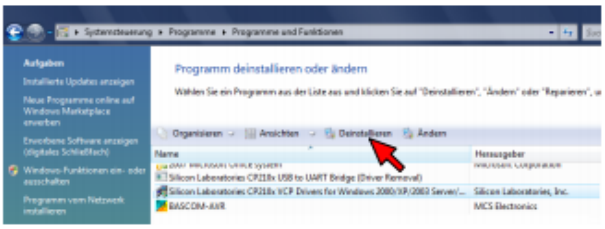

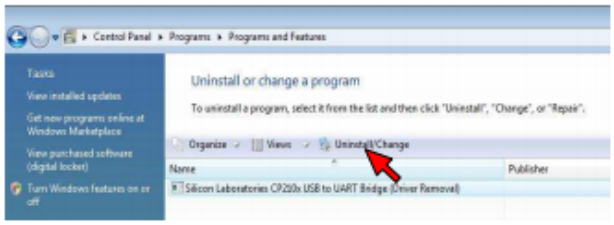

Installation of the new driver

Unzip the downloaded file in a directory on your hard disk. To install the driver start the program "CP210xVCPInstaller.exe".

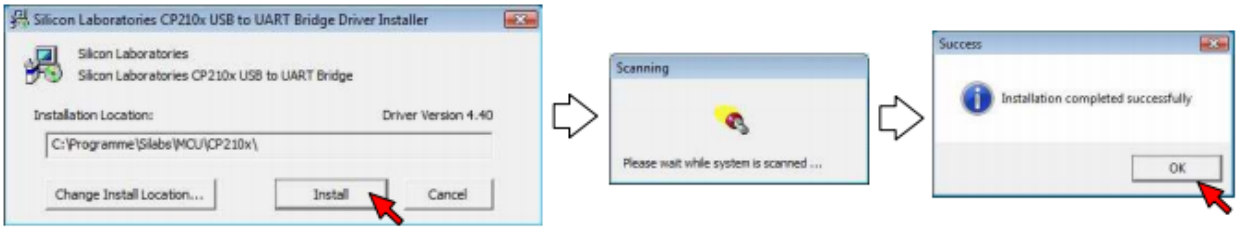

Wait till the installation has been finished successfully, then you can connect mySmartUSB MK2 to your computer.

This will finish the installation process and a new virtual COM-port will be provided.

Now you can use the USB Programmer.

mySmartUSB MK2 can be used either as serial programmer or as USB UART bridge. On Microsoft Windows virtual COM-port can be seen in the device manager.

Clean up
After installation you can delete the ZIP-file and the extracted directory. All needed files have been copied to the corresponding system folders.

Software settings

Use with SiSy (from version 2.18a)
While open a new project in SiSy AVR you define the hardware-settings in “myAVR ProgTool”.

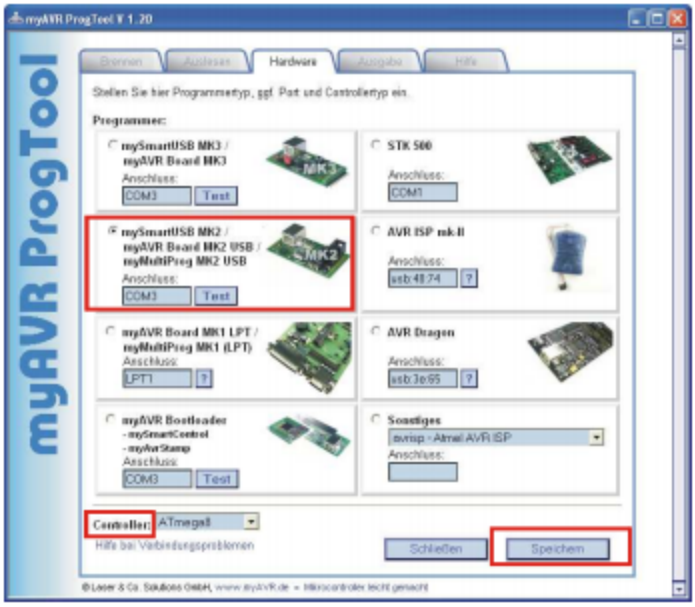

In an existing SiSy-project you can reach the hardware settings over these steps:

1. menu
2. „Projekt/Definieren or ”Objekt-Kontextmenü“ right mouse button
3. „Definieren“
4. index card „Extras (AVR)“
5. button „Hardware einstellen“

Use with myAVR Workpad Version 1.4

In the myAVR Workpad you can find the programmer settings under:

1. menu
2. “Extras”
3. “Einstellungen”

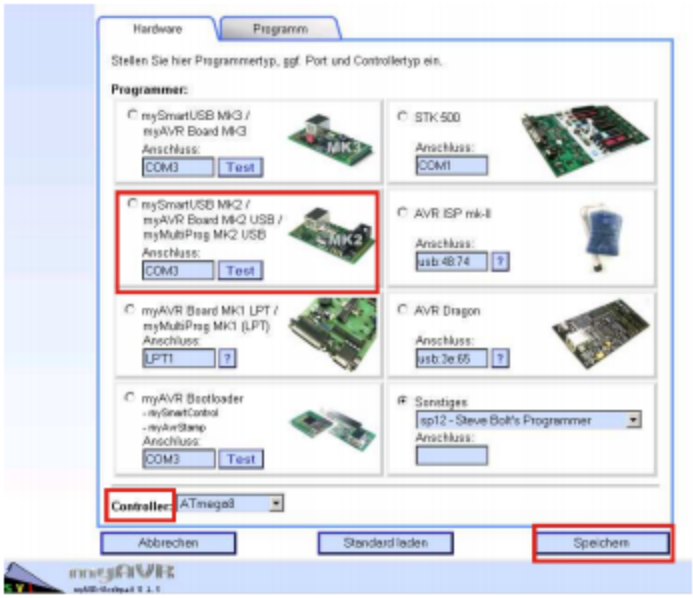

Use with Arduino

insert the programmer in the “Programmers.txt” the location of this file can vary through some arduino versions. for example:
\AppData\Local\Arduino15\packages\arduino\hardware\avr\1.6.20

insert the following code to the “Programmers.txt” file:

```
avr911.name=mySmartUSB MK2
avr911.communication=serial
avr911.protocol=avr911
avr911.program.protocol=avr911
avr911.program.tool=avrdude
avr911.program.extra_params=-P{serial.port}
```

Use with AVR Studio version 4.12.498

If you use the AVR studio, please choose “AVR Prog” in the menu “Tools”. The programmer has to be connected if you select the menu item. AVR Prog will find the mySmartUSB MK2 automatically.

AVR-Prog is looking only at the COM-Ports 1 to 4. If the virtual COM-Port of mySmartUSB MK2 is more than 4 than AVR studio will not find it. In this case you need to select a valid COM-port in the system settings. Follow this procedure:

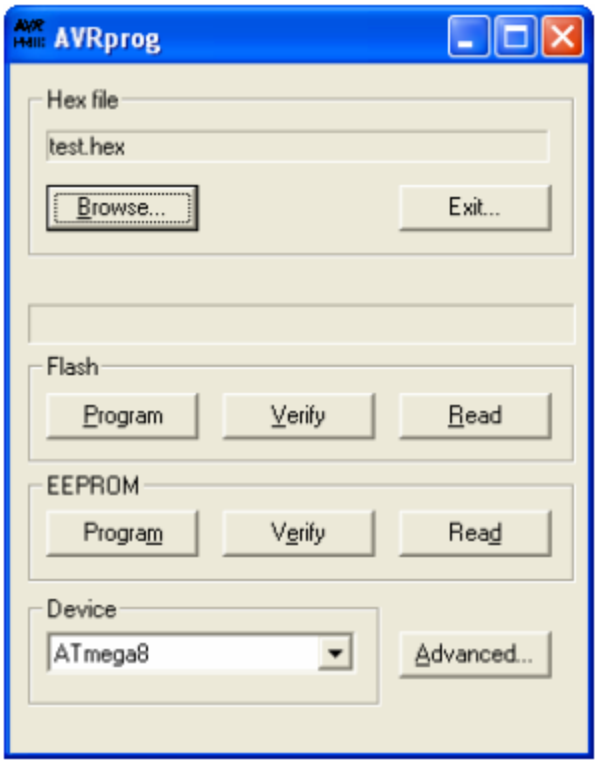

1. open the device manager
2. Open the rubric: Ports (COM and LPT) themed open USB controller
3. Choose driver: "CP210x USB to UART Bridge Controller (COMx)"
4. Right mouse button -> Properties-> Port settings-> Advanced
5. modify and confirm COM-port number
6. we recommend COM3 or COM4, please notice possible driver conflicts

Use with AVRDUDE

AVRDUDE is a command-line tool. The parameter line for AVRDUDE should look as follow:

```
C:\Programme\winavr\bin\avrdude.exe -p ATmega8 -e -c avr910
-P com4 -Uflash:w:"TEST.hex" :i
```

```
-p MCU-Typ
-e
-c avr910
-P COMx
-U flash:w:"Dateiname.hex":i
```

Use with CodeVision version 1.25.5

The programmer settings in CodeVision you find in the menu “Settings/Programmer”. You should select Atmel AVR Prog (AVR910), COMx, 19200 Baud

The programmer you select over the menu item „Tools / Chip Programmer“.

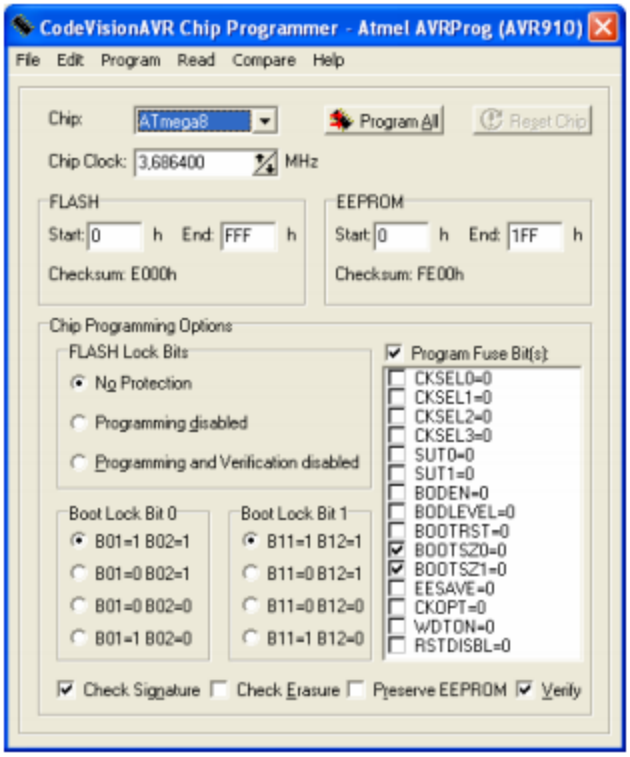

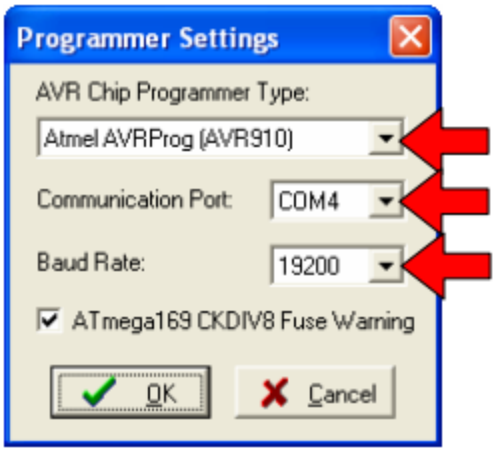

The mySmartUSB MK2 protocol

Besides the standard AVR910 and AVR911 protocols the firmware of the USB programmer mySmartUSB MK2 uses an own protocol to perform additional tasks. The mySmartUSB MK2 protocol will be activated over a specific character string, that has to precede the instructions.

mySmartUSB MK2 - instructions:
baud rate: 19200, 8, n, 1
prefix: "æµo123©"+instruction in ASCII code (= 0xE6 0xB5 0xBA 0xB9 0xB2 0xB3 0xA9)

command:

r reset board
R reset programmer
+ board power on
- board power off
p programming mode
d data-bypass mode
q quiet mode (neutral)
i return state

Returncodes for mySmartUSB MK2 commands:

'÷' = 0x7F
'±' = 0xB1
the command (e.g. 'd' for data mode)
13 (=CR)
10 (=LF)

The command line-tool myavr_progswitch

In the download area on www.myAVR.com you can find the program myavr_progswitch.exe. This program helps you to switch between the different operation modes of the USB programmer mySmartUSB MK2. Furthermore you will be able to burn your own HEX-files to the connected microcontroller. Also, the myavr_progswitch is a command-line tool and can be called over a make-file.

Notice: Please use the current firmware of mySmartUSB MK2.

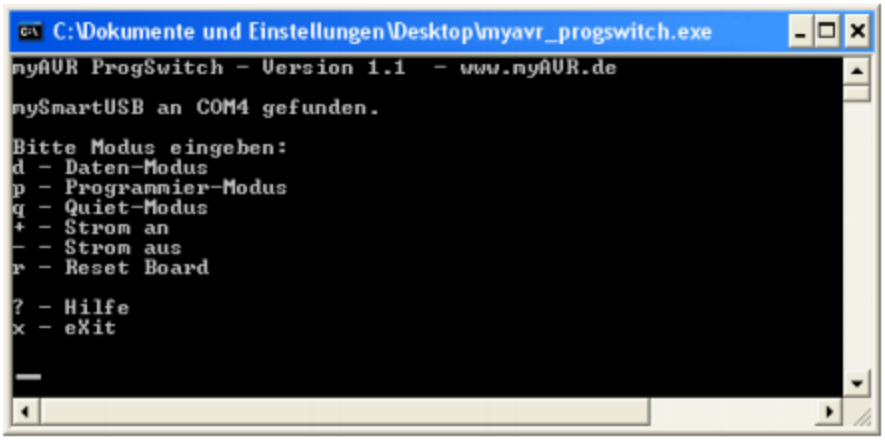

parameters:

-m<p|d|q> operation mode (programming|data|quiet)

-p<on|off> external power supply activated|deactivated

-r reset board

-b "file_name" burn HEX-file

Without using any parameter myavr_progswitch starts in dialog-mode. That you can switch between the operation modes of mySmartUSB MK2.

Assembled my AVR Board MK2

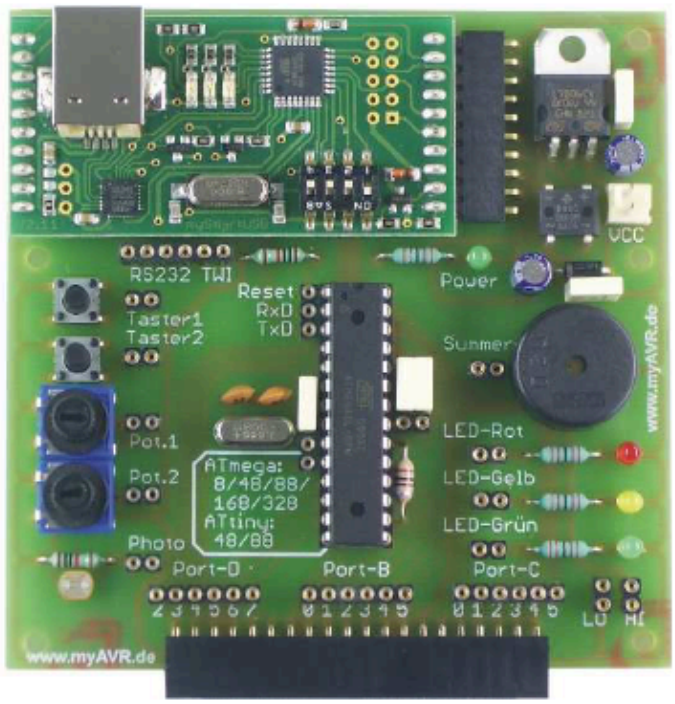

3,3V / 5V switchable

mySmartUSB MK2 works normally with 5 V and is suitable with it for 5 V target systems. However, the adaptation to 3.3 V pur-pose surroundings is also realizable.

The mySmartUSB MK2 owns the USB controller CP2102 from SiLabs. This has an internal 3.3 V voltage regulator. The circuit of mySmartUSB MK2 is designed for power source to be able to work on 3.3 V level working. This allows 3.3 V directly target systems to be programmed.

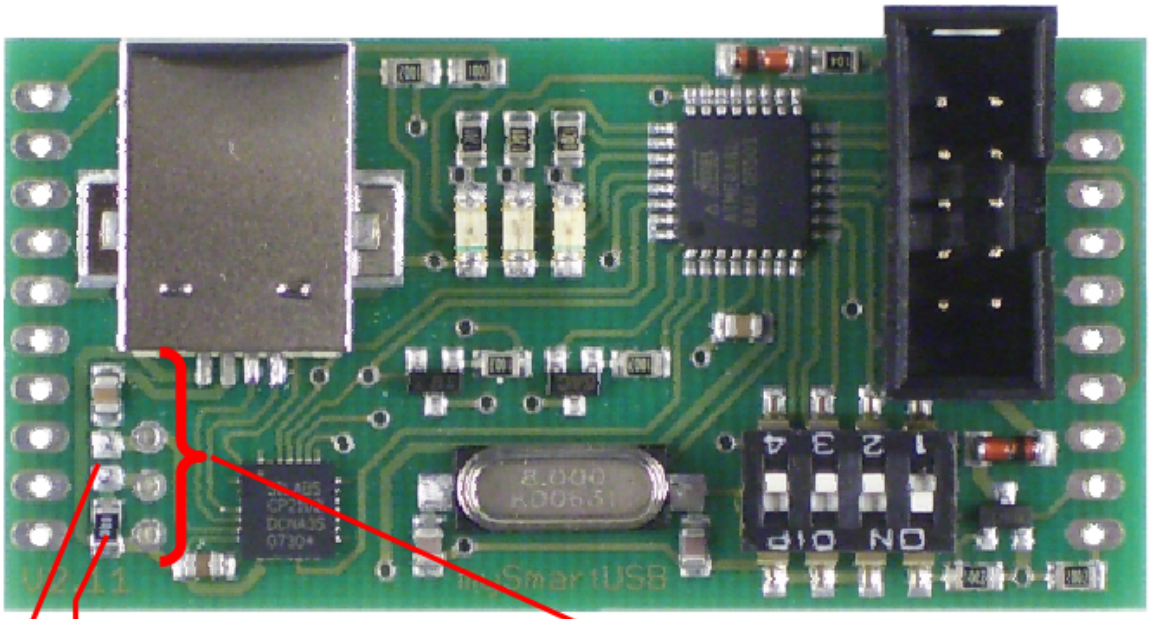

Spannungskonfiguration mit
Durchkontaktierungen für Stiftleiste SL3x1
Power configuration with holes for pin header SL3x1

0 Ohm Brücke auf 5 V Versorgung
0 Ohm Bridge of 5 V supply

keine Brücke auf 3,3 V Versorgung
no Bridge of 3,3 V supply

Step 1

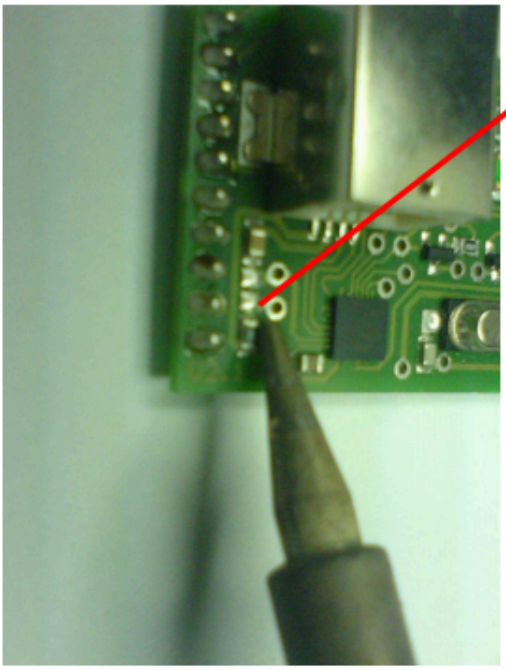

Brücke vorsichtig auslöten,
ACHTUNG! Leiterbahnen nicht überhitzen!!!
Be cautious while unsoldering Bridge,
ATTENTION! conducting paths not be overheat!!!

Step 2

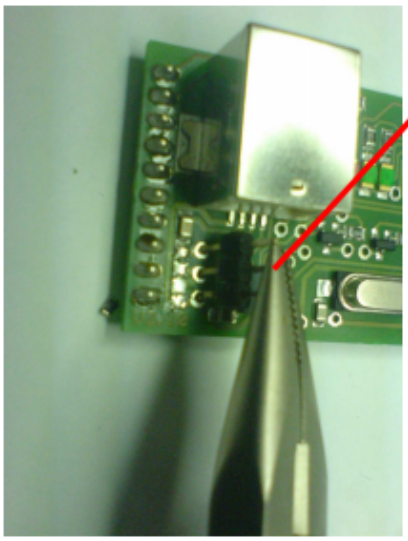

Stiftleiste einlöten.
Beachte:
Den mySmartUSB MK2 können Sie über die gewinkelten Stiftleisten auf der Unterseite auf ein myAVR Board aufsetzen. Dafür sollten Sie die eben eingelöteten Stifte ggf. kürzen.

To solder the pin header.
Note:
MySmartUSB MK2 Board you can touch down about the bent pencil strips on the bottom of myAVR Board. For it you should shorten the just soldered pencils if necessary.

Step 3

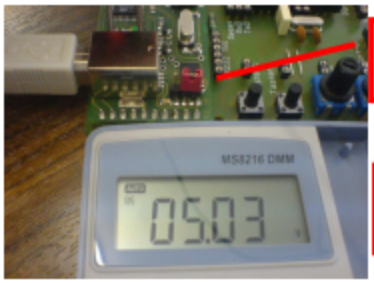

Jumper auf 5 V Position
Jumper of the 5 V position

Jumper auf 3,3 V Position
Jumper of the 3,3 V position

MyAVR LCD

Pin configuration

```
const int rs = 2, en = 3, d4 = 4, d5 = 5, d6 = 6, d7 = 7;
LiquidCrystal lcd(rs, en, d4, d5, d6, d7);
```

Arduino	PIN	Description
2	D2	RS = Enable
3	D3	E = Enable
4	D4	Databit 4
5	D5	Databit 5
6	D6	Databit 6
7	D7	Databit 7
Optional		
8	B0	R/W = Read/Write mode (or fixed at low with dipswitch)

9	B1	Background LED (or fixed high with dipswitch)

Schematics

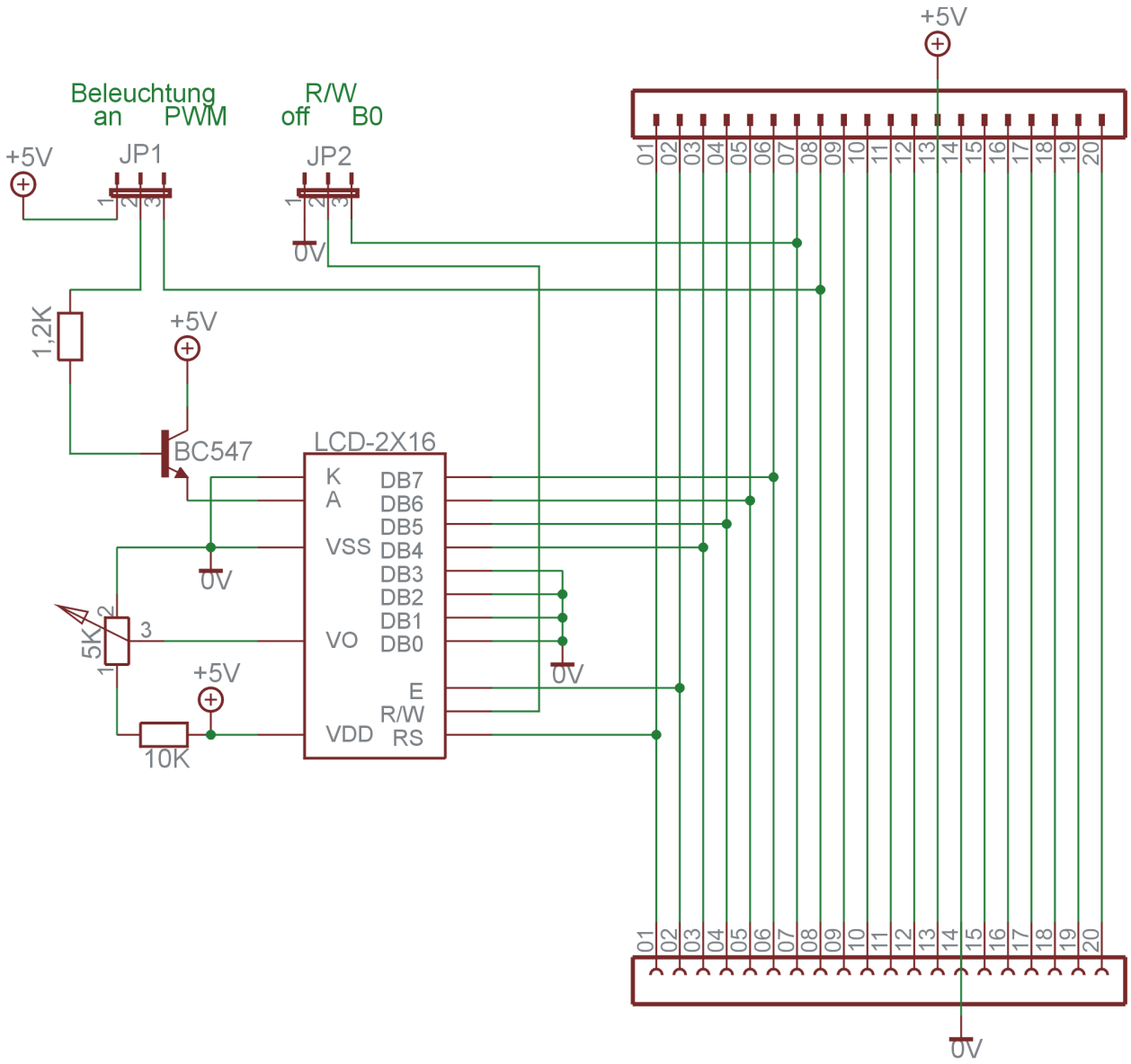

4	3	2:	1
	1: Out R	8: VDD	
	2: Out G	7: NC	
	3: Out B	6: DIN	
	4: GND	5: DO	
5	6	7	8